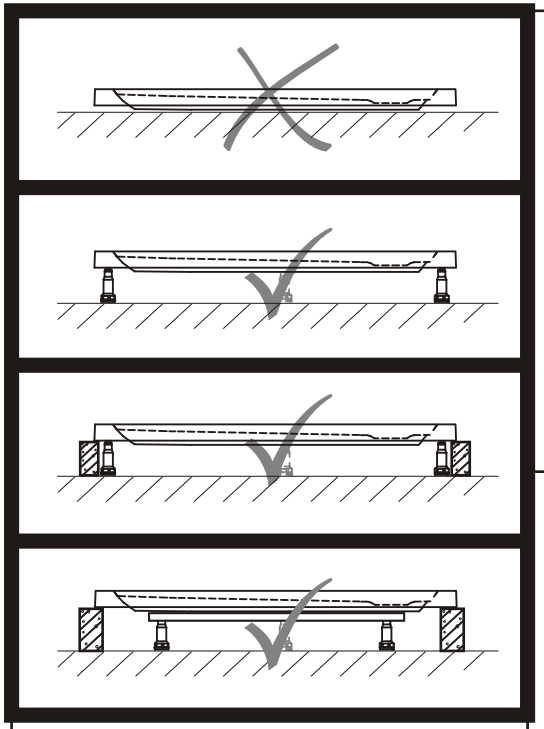

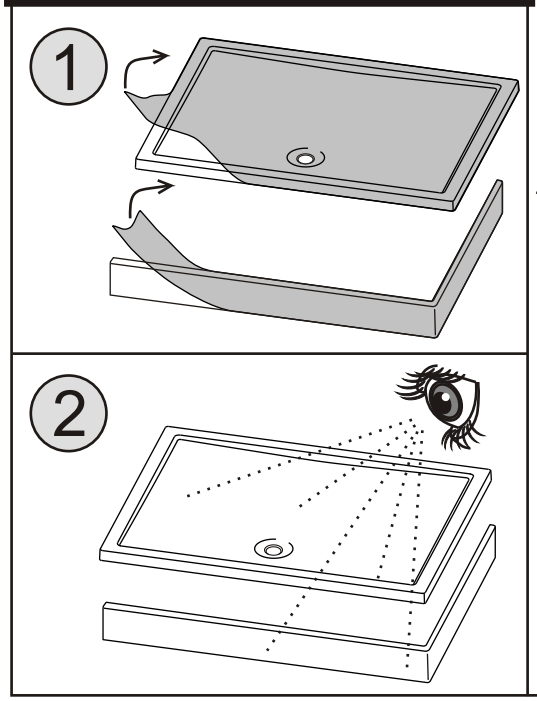
1
2

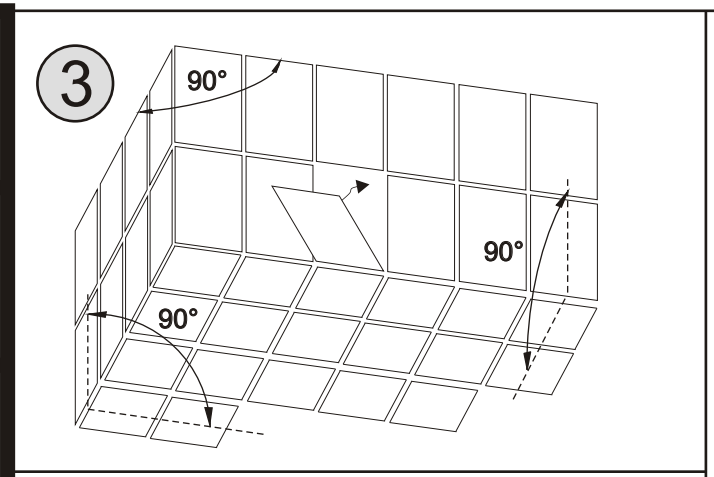
3
90°
90°
90°

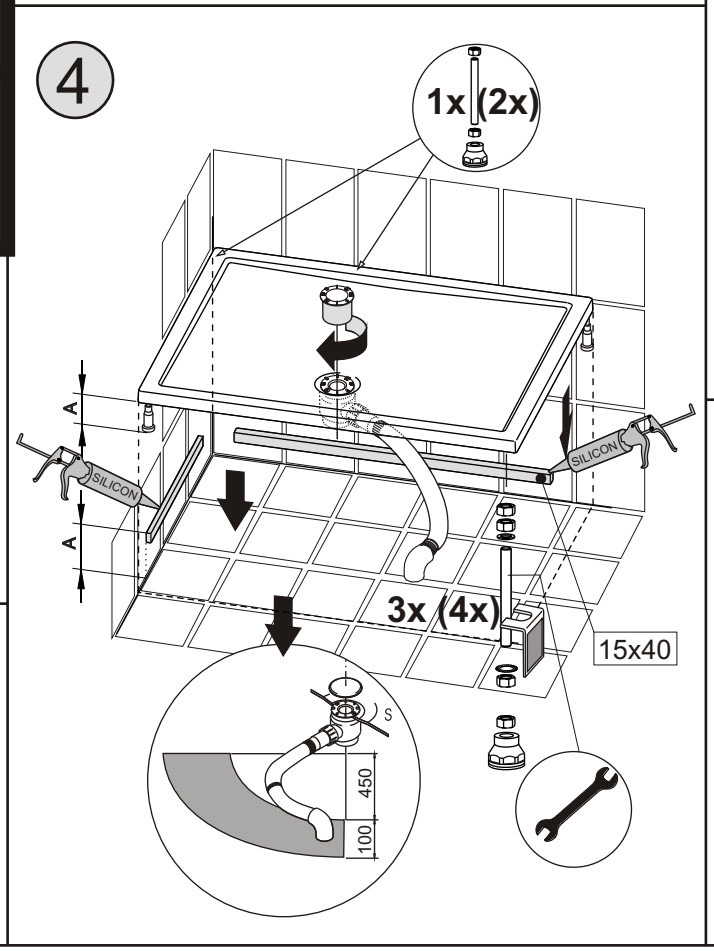
4
1x (2x)
A
A
SILICON
SILICON
3x (4x)
15x40
S
450
100

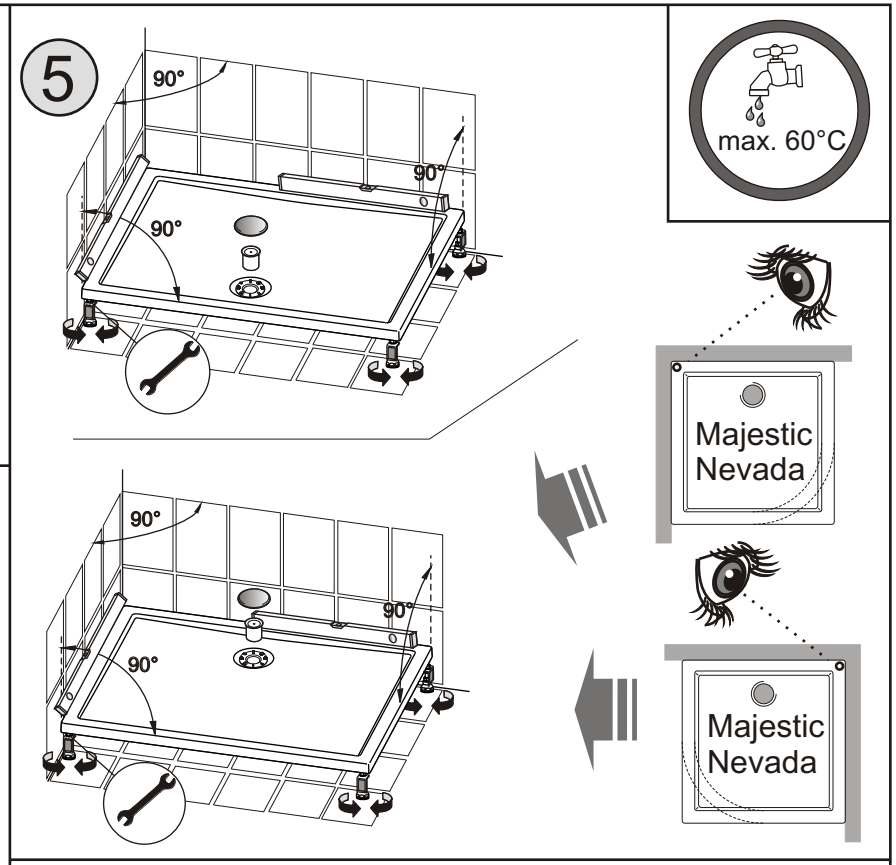
5
90°
90°
90°
90°
90°
90°
max. 60°C
Majestic
Nevada
Majestic
Nevada

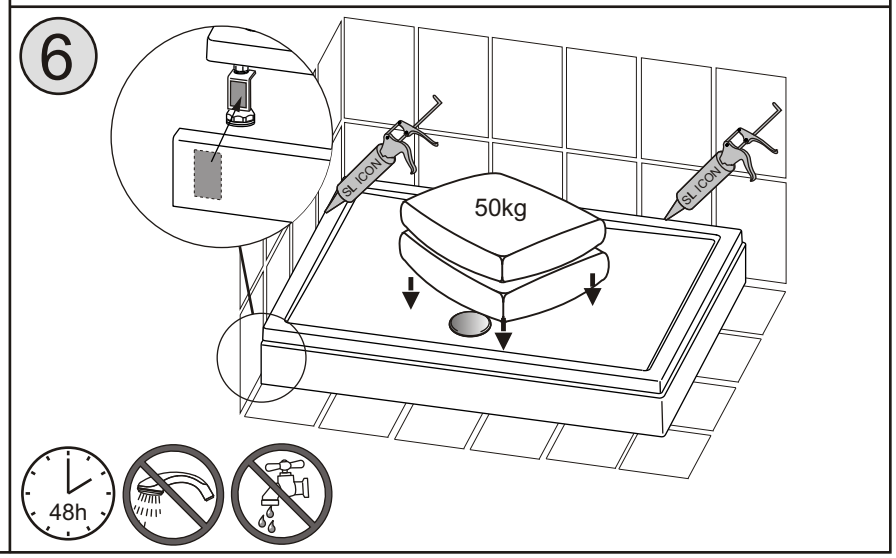
6
SILICON
SILICON
50kg
48h

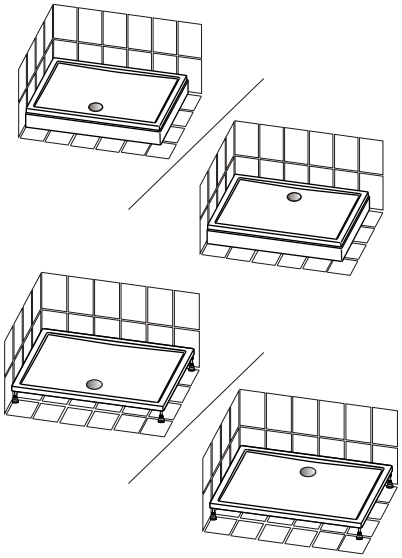

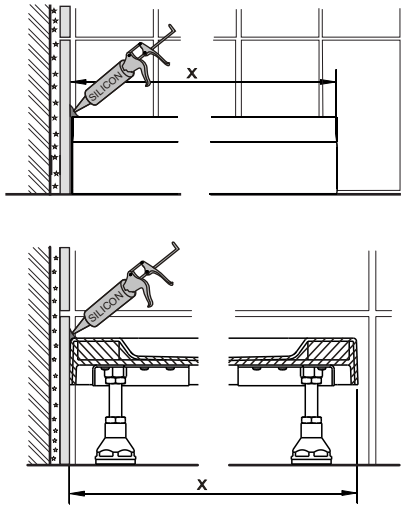
SILICON
X
SILICON
X

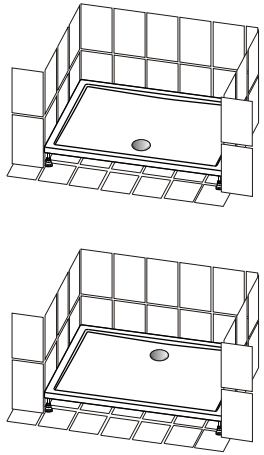

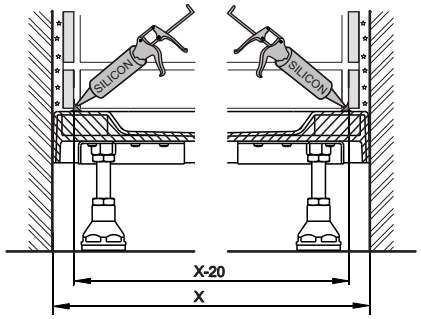
SILICON
SILICON
X-20
X

Standard RIHO **Nautic, Fjord, Scandic, Scandic Wall, Mistral**

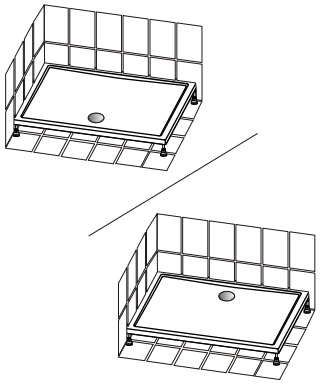

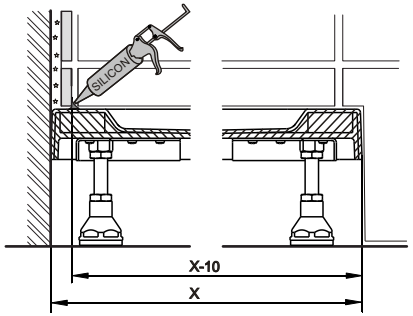
SILICON
X-10
X

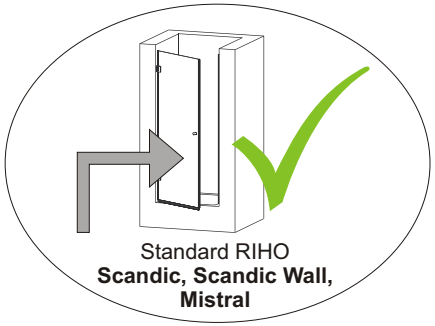
Standard RIHO
Scandic, Scandic Wall, Mistral

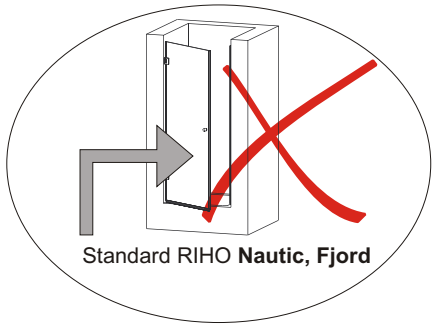
Standard RIHO **Nautic, Fjord**

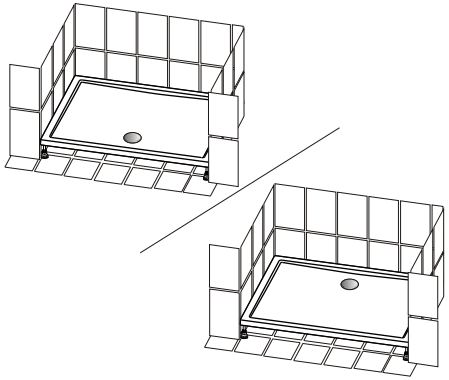

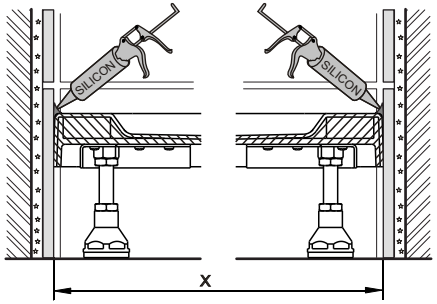
SILICON
SILICON
X

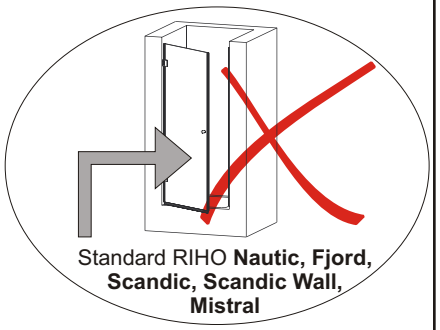
Standard RIHO **Nautic, Fjord, Scandic, Scandic Wall, Mistral**